ANGELO PO - BASE REFRIGERATA TN lt.680, 3 CASSETTI+3 PORTINE
6TRC2M - 15-07-2002 » 12-12-2005

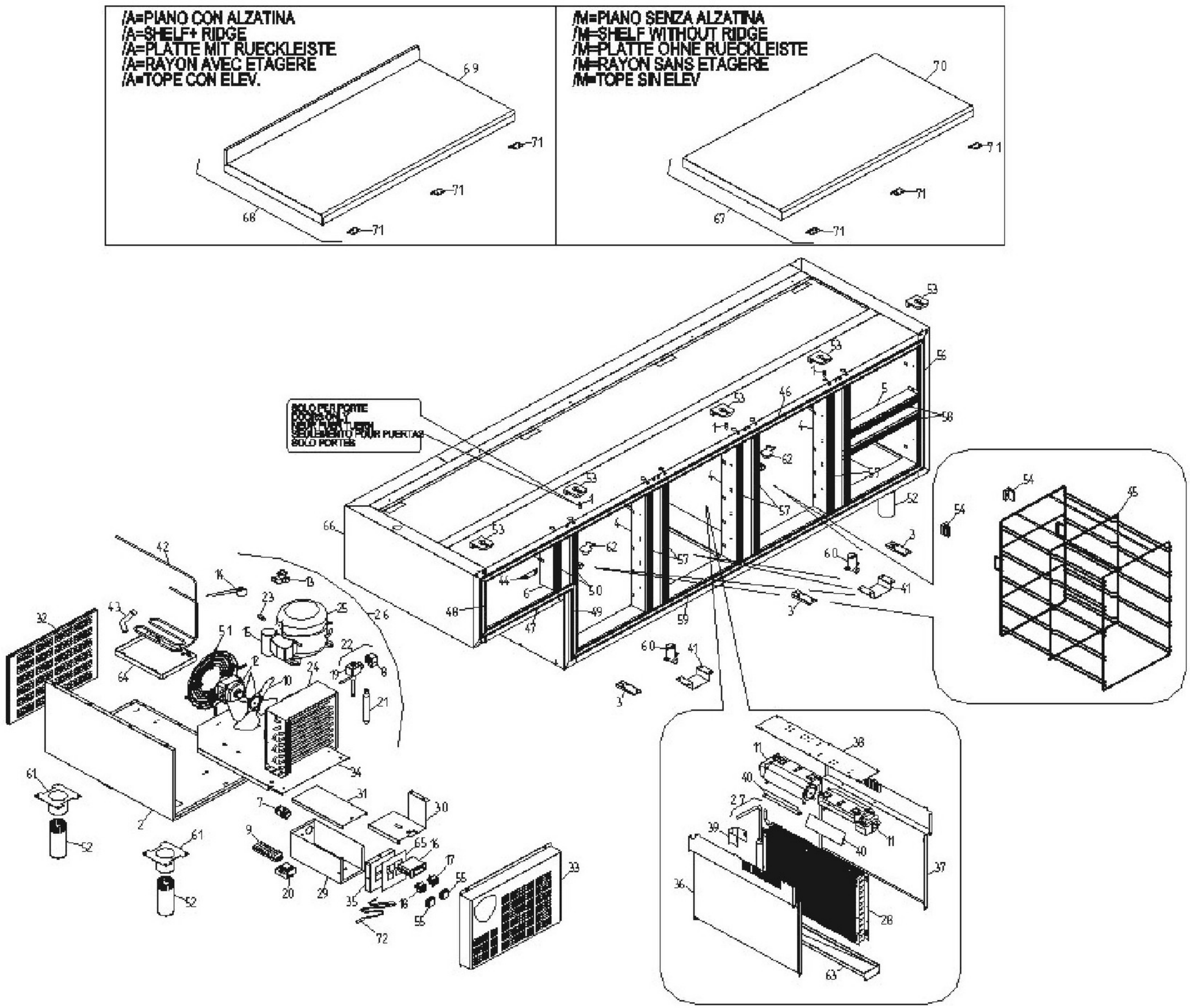

Modello Typ Model Modele Modelo
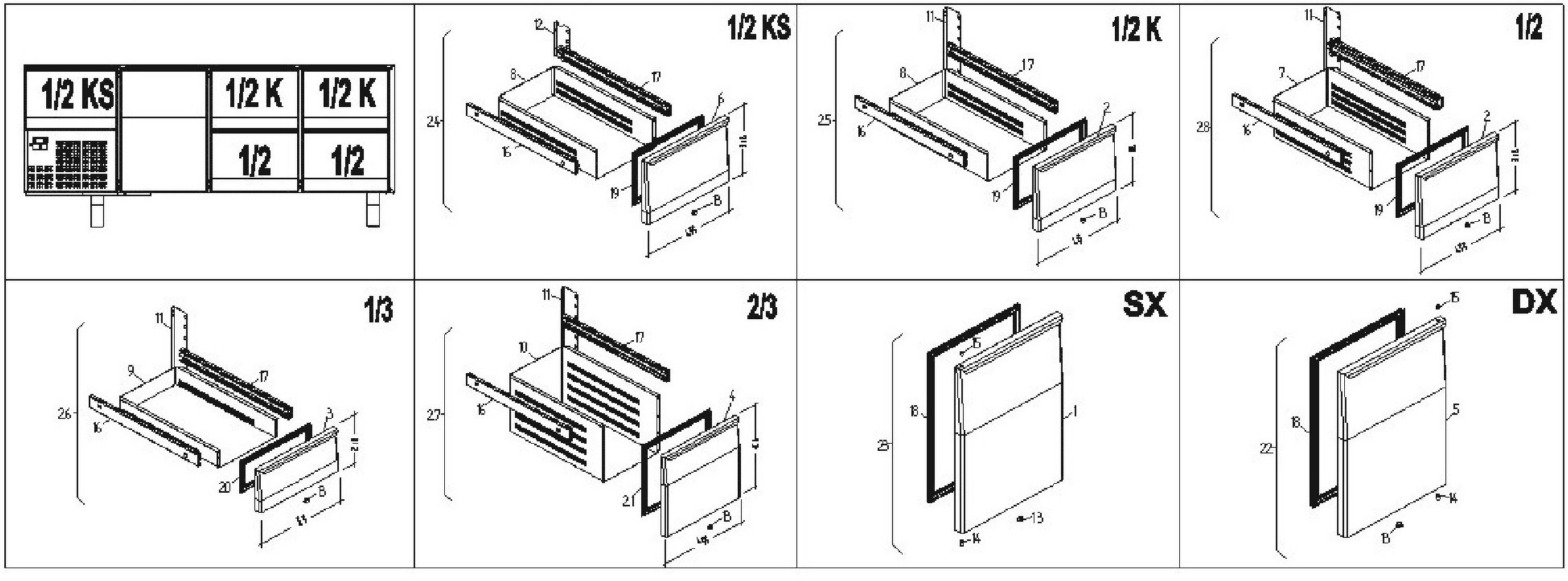
		6TRA 6TRAA 6TRAM 6TRAZ 6RA 6RAA 6RAM 6RAZ	6TRA2 6TRA2A 6TRA2M 6TRA2Z 6RA2 6RA2A 6RA2M 6RA2Z	6TRA4 6TRA4A 6TRA4M 6TRA4Z 6RA4 6RA4A 6RA4M 6RA4Z	6TRB 6TRBA 6TRBM 6TRBZ 6RB 6RBA 6RBM 6RBZ	6TRB2 6TRB2A 6TRB2M 6TRB2Z 6RB2 6RB2A 6RB2M 6RB2Z	6TRB4 6TRB4A 6TRB4M 6TRB4Z 6RB4 6RB4A 6RB4M 6RB4Z	6TRB6 6TRB6A 6TRB6M 6TRB6Z 6RB6 6RB6A 6RB6M 6RB6Z	6TRB11 6TRB11A 6TRB11M 6TRB11Z 6RB11 6RB11A 6RB11M 6RB11Z	6TRC 6TRCA 6TRCM 6TRCZ 6RC 6RCA 6RCM 6RCZ	6TRC2 6TRC2A 6TRC2M 6TRC2Z 6RC2 6RC2A 6RC2M 6RC2Z	6TRC4 6TRC4A 6TRC4M 6TRC4Z 6RC4 6RC4A 6RC4M 6RC4Z	6TRC6 6TRC6A 6TRC6M 6TRC6Z 6TRC6 6RC6A 6RC6M 6RC6Z	6TRC11 6TRC11A 6TRC11M 6TRC11Z 6RC11 6RC11A 6RC11M 6RC11Z
Num. cassetti	1/2KS	1	1	1	1	1	1	1	1	1	1	1	1	1
Schubladen	1/2K	-	1	2	-	1	2	3	-	-	1	2	3	-
Drawers	1/2	-	1	2	-	1	2	3	-	-	1	2	3	-
Tiroirs	1/3	-	-	-	-	-	-	-	1	-	-	-	-	1
Gabetas	2/3	-	-	-	-	-	-	-	1	-	-	-	-	1
Porte Türen Doors Portes Puertas	DX	1	-	-	1	-	-	-	-	1	-	-	-	-
	SX	1	1	-	2	2	1	-	2	3	3	2	1	3